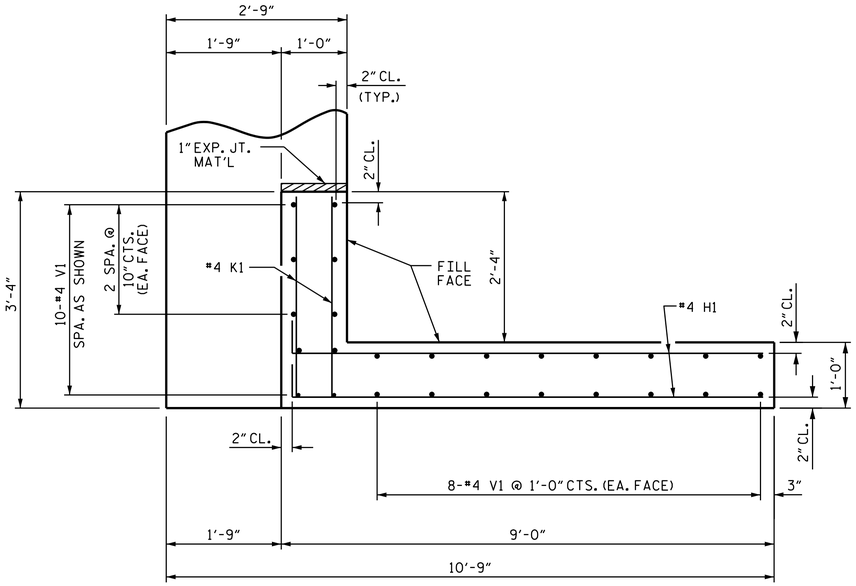

PLAN OF WING (W1)

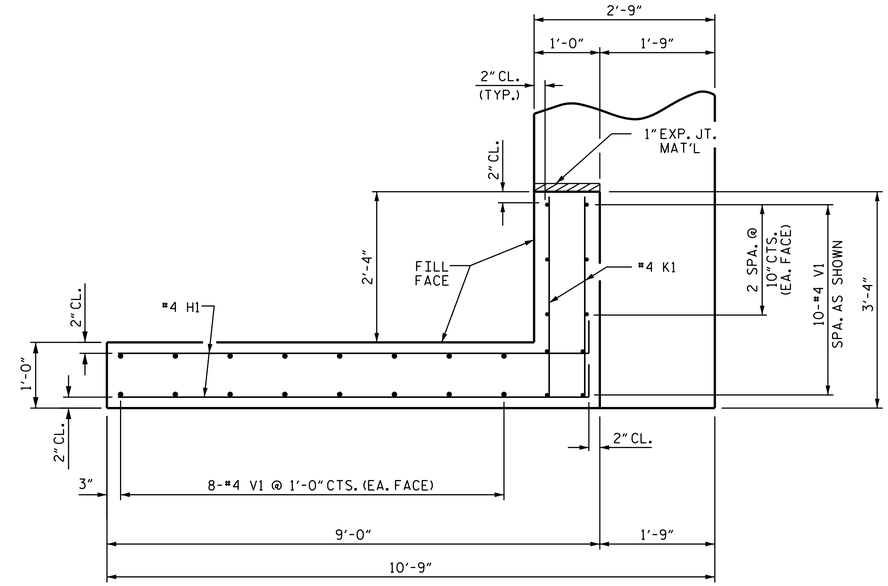

PLAN OF WING (W2)

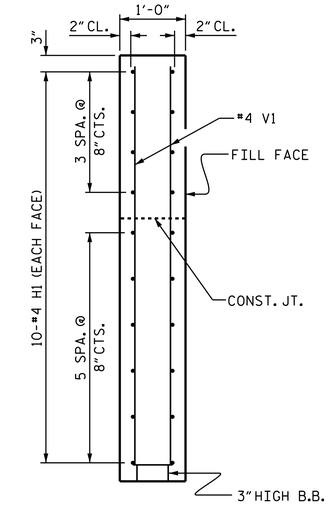

SECTION X-X

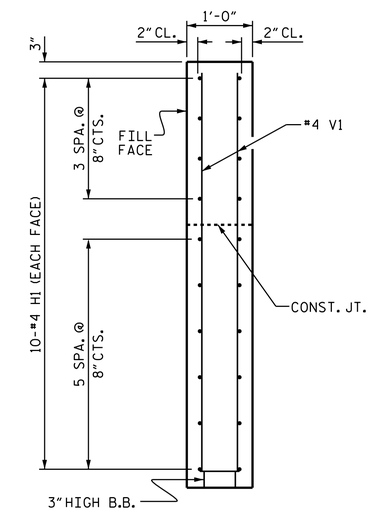

SECTION Y-Y

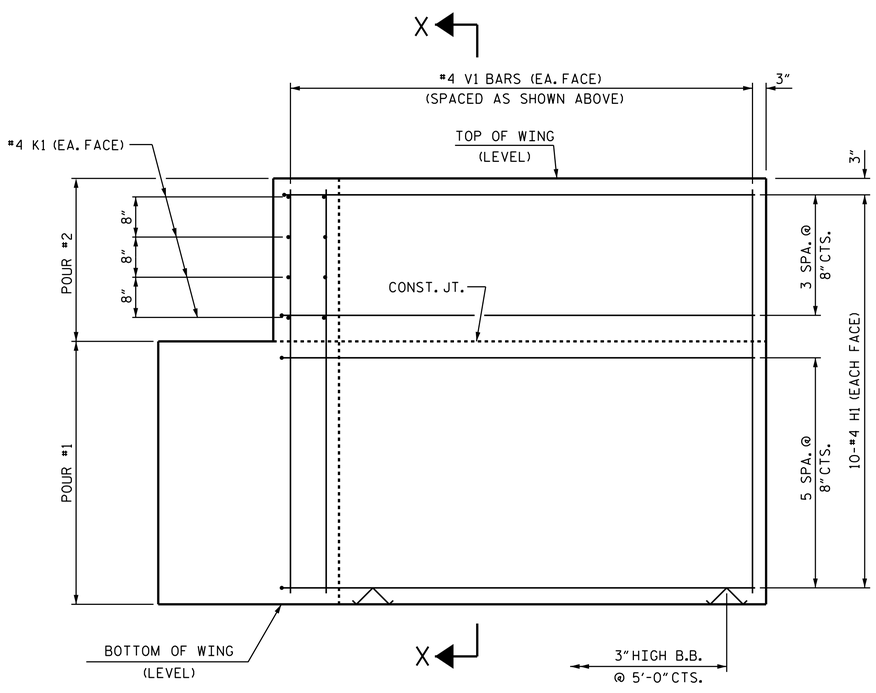

ELEVATION OF WING (W1)

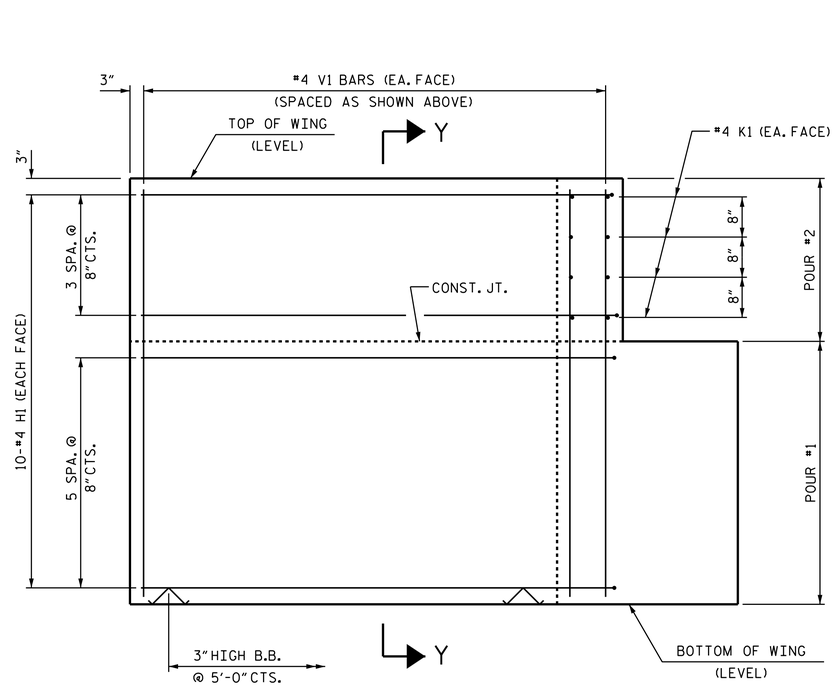

ELEVATION OF WING (W2)

WING DETAILS

PROJECT NO. 17BP.8.R.113

LEE COUNTY

STATION: 15+17.00 -L-

SHEET 3 OF 4

NORTH CAROLINA PROFESSIONAL SEAL 29048 ENGINEER RAMIN P. PATEL

DocuSigned by: Ramin Patel 60F537B5DA1F41D... 1/31/2017

DOCUMENT NOT CONSIDERED FINAL UNLESS ALL SIGNATURES COMPLETED

STATE OF NORTH CAROLINA
DEPARTMENT OF TRANSPORTATION
RALEIGH

SUBSTRUCTURE

END BENT
WING DETAILS

REVISIONS							
NO.	BY:	DATE:	NO.	BY:	DATE:	SHEET NO.	S-11
1			3			TOTAL SHEETS	14
2			4				

ASSEMBLED BY : H. KIM		DATE : 8/10/16	
CHECKED BY : R.P. PATEL		DATE : 8/10/16	
DRAWN BY : WJH	12/11	REV. 4/15	MAA/TMG
CHECKED BY : AAC	12/11		

27-JAN-2017 14:24
O:\Division08\520087\Structures\Plans\FinalPlans\17BP.8.R.113_EB.dgn
ksadal

STD. NO. EB_39_90S4